apply to

TRD FJ

Roof basetet
Users Manual
model year：2020

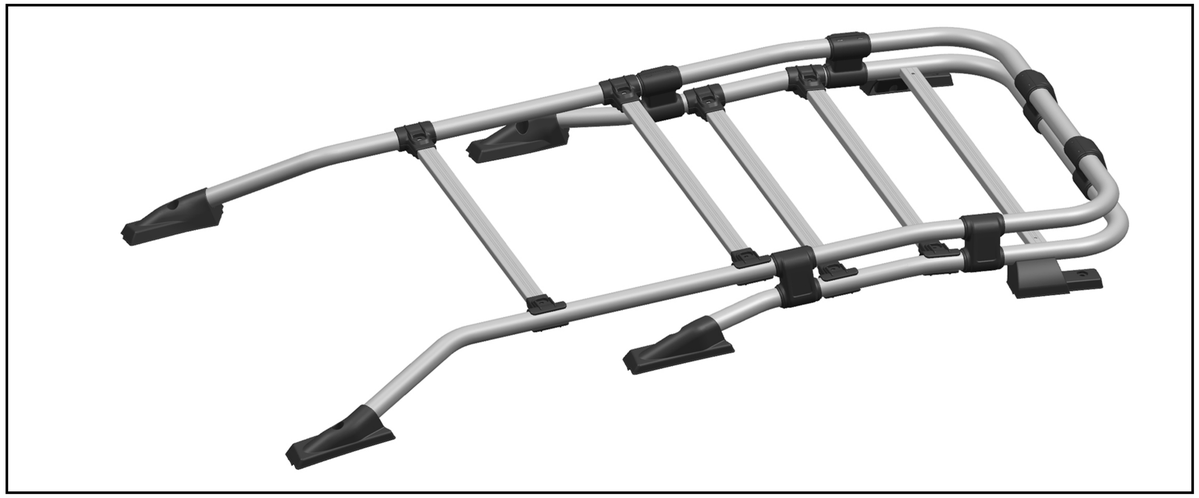

图示 picture	名称 name	pcs	图示 picture	名称 name	pcs
	左侧双层铝管 Left double aluminum tube	1		横杆尼龙夹子 A&B Cross bar nylon clip A&B	8
	右侧双层铝管 right double aluminum tube	1		软胶圈 rubber circle	48
	后侧双层铝管 rear double aluminum tube	1		横杆铝管 42*23*952mm cross bar 42*23*975mm	2 2
	前端尼龙底座 L&R front nylon base L&R	1		螺栓A bolt-A M6*14mm	16
	中间尼龙底座 L&R middle nylon base L&R	1		螺栓B 自攻钉 bolt-B tapping screws M5*30mm	6
	后端尼龙底座 L&R rear nylon base L&R	1		螺栓C bolt-C M6*40mm	8
	前端软胶垫 L&R front rubber pad L&R	1		螺栓D bolt-D M8*50mm	6
	中间软胶垫 L&R middle rubber pad L&R	1		垫片A gastet-A M6*12mm	30
	后端软胶垫 L&R rear rubber pad L&R	1		垫片B gasket-B M8*20mm	6
	侧饰盖A&B Side cover A&B	6		铁片A metal plate-A 37*30mm	8
	圆管 Round tube	4		连接件 Connector	6

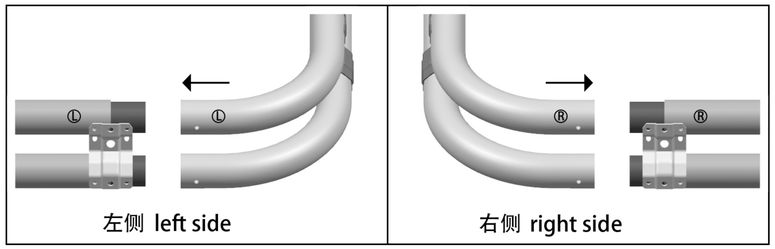

fig 2-1

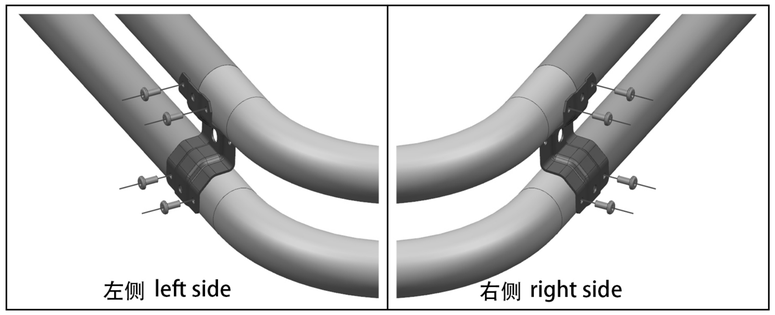

fig 2-2

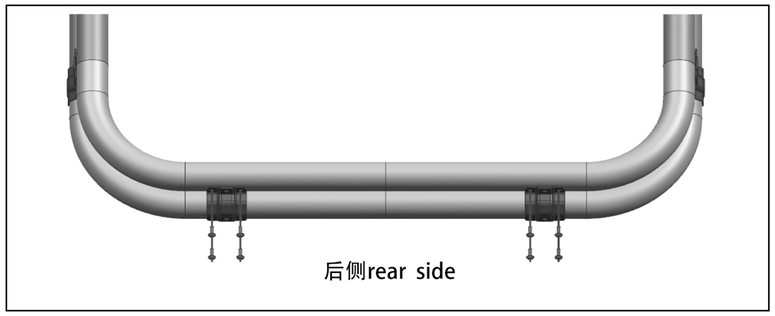

fig 2-3

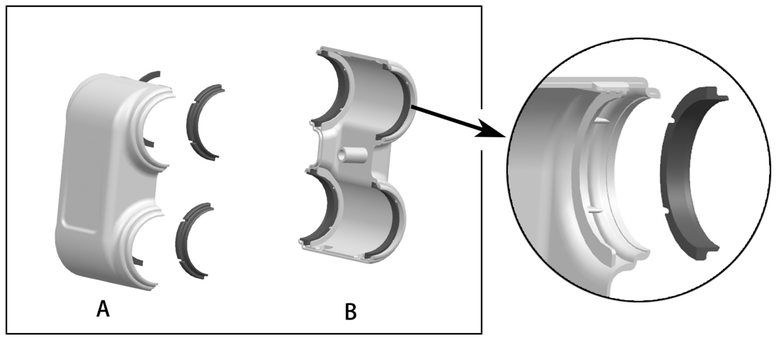

fig 2-4

fig 2-1

a：将左右两侧双层管配件取出

b：按标识对准
（管上贴有L和R小标签）

c：插入后侧双层管内

a: take out the double pipe fittings on the left and right sides.

b: align it with the label.
(small L and R labels are affixed on the tube.)

c: insert into the back double-layer tube.

fig 2-2

a：调整配件,使三层配件孔位对齐
（内衬管,外侧管,冲压铁件）

b：使用螺栓A+垫片A 依次拧入
（不用锁紧）

c：待4个螺栓都拧入后再依次锁紧

a: adjust the accessories so that the holes of the three layers of accessories are aligned.
(inner tube, outer tube stamping iron parts.)

b: screw in bolt-A and gasket-A
(no locking.)

c: wait until all 4 bolts are screwed in and then lock them one by one.

fig 2-3

a：参照上图方式,锁紧后侧

a:look the picture,lock the rear side screw.

fig 2-4

a：取出所有侧饰盖A&B
（A&B为一组,共四组）

b：按图示，装入软胶圈
（提示：单面放垫圈）

a: take out all the side covers A&B.
(A&B is a group of four.)

b: put in the rubber ring as shown.
(Tip: Put the washer on one side.)

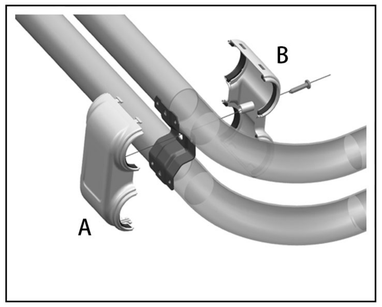

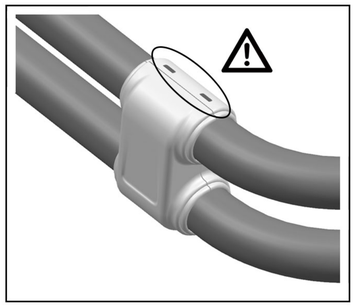

fig 3-1

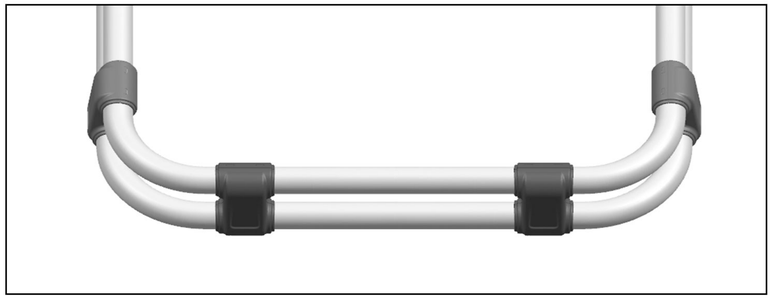

fig 3-2

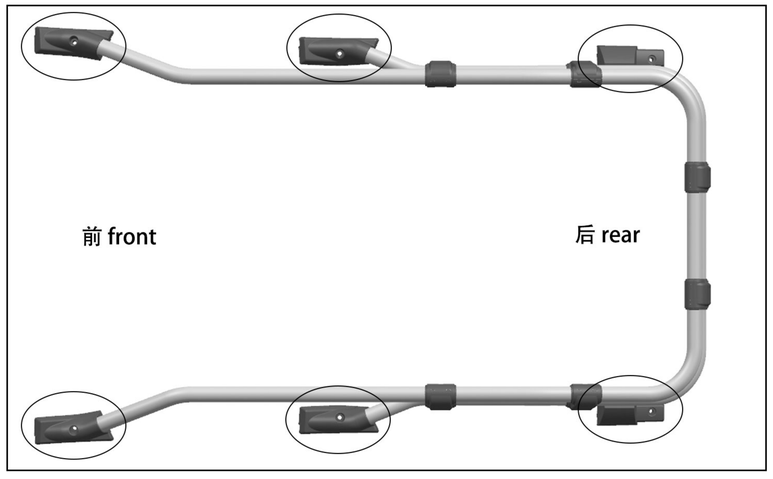

fig 3-3

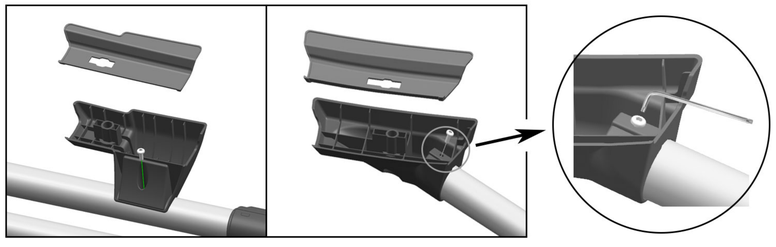

fig 3-4

fig 3-1

a：参照左图,将装好软胶圈的侧饰盖互相扣紧

(圆柱需穿过冲压铁件中间的圆孔)

b：从饰盖B孔位拧入螺栓B

注：扣紧后应像右图所示，表面平整

a: look the picture on the left, install the side cover of the rubber ring fasten to each other.
(the cylinder shall pass through the round hole in the middle of the stamping iron.)

b: screw bolt-B in the hole B of cover.

Note: after fastening, the surface should be smooth as shown in the picture on the right.

fig 3-2

a：参照上图,依次装好4处侧饰盖

注：检查是否安装牢固

a:look the picture, install the 4 side covers one by one.

Note: check if the installation is firm.

fig 3-3

a：参照图示,安装前后底座

注：底座反面内侧有方向识别符号

a: look the picture,install the front and rear mounting bases

Note: there is a direction identification symbol on the inside side of the base

fig 3-4

a：参照图示,将框架翻面,拧入螺栓A垫片A

b：装上前后胶垫

a: look the picture,turn the frame over and screw in the bolt-A, gasket-A

b: put on the front and back rubber pads

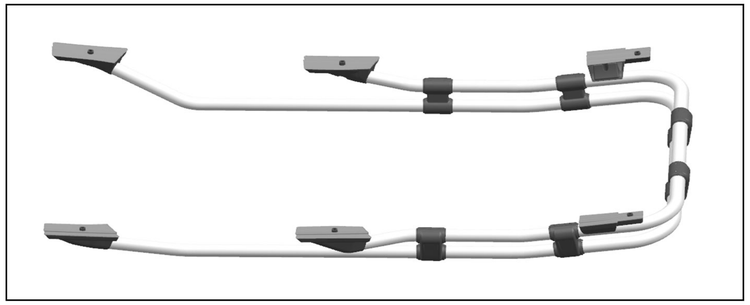

fig 4-1

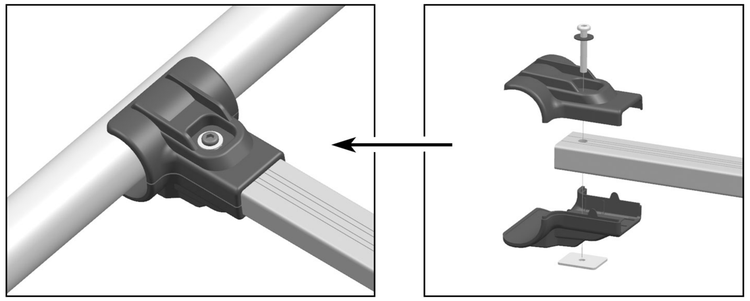

fig 4-2

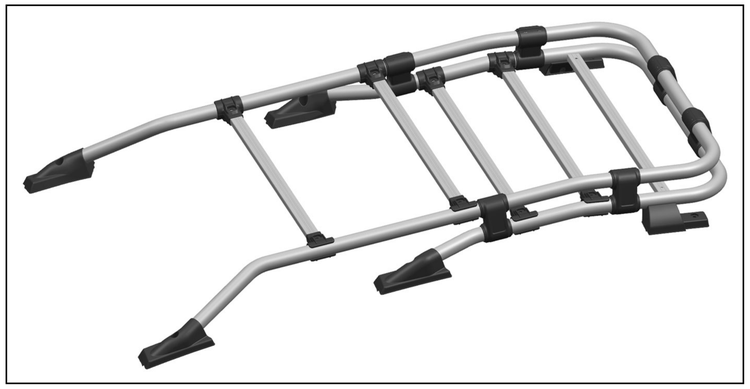

fig 4-3

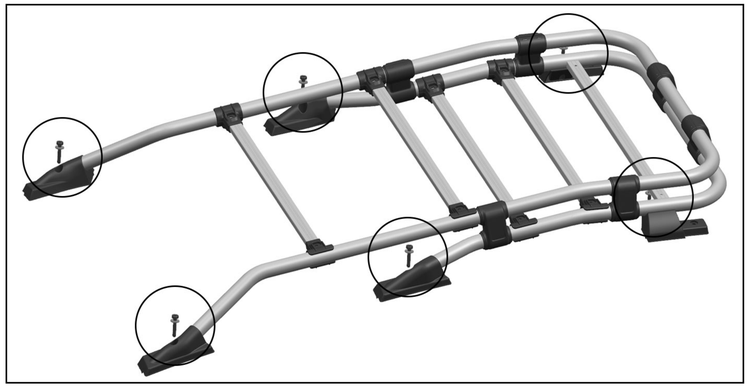

fig 4-4

fig 4-1

a：参照上图,依次安装底座胶垫

注：检查底座与胶垫是否安装正确与牢固

a:look the picture ,Install base rubber cushion in turn

Note:
check whether the base and ubber pad are installed correctly with the strong

fig 4-2

a：参考右图，组装横杆，需3组（螺栓C,垫片A，铁片A）

b：将横杆两头卡入外侧圆管(不要锁太紧)

a:look the picture ,to assemble the crossbar, three sets are needed (bolt -C, gasket -A, metal plate-A .)

b: stick the ends of the cross bar into the outer tube

fig 4-3

a：参考图所示5处横杆位置调整好后，依次锁紧

a: refer to the five crossbar positions shown in the drawing after adjustment, lock in turn

fig 4-4

a：参考图示,将胶块放入车顶雨槽内再将框架放置车顶，对准孔位，拧入螺栓D,垫片B

(先锁紧前端，再锁紧后端)

注：检查所有配件是否有遗漏

a: Refer to the picture, put the rubber block in the roof rain trough, and then place the frame on the roof, aiming at the hole position, screw in bolt-D,gasket-B
(lock the front end first, then the back end)

Note: check all accessories for omissions

安装完成！

installation is complete!